Safety Instructions & Operators Manual

COUNTRY CLIPPER®

Zero Turn Radius Mower

WRANGLER

135

Congratulations for buying a ***Country Clipper*** product. Your ***Country Clipper*** Zero Turn Radius Riding Mower was designed and built to provide long and trouble free service. Keep in mind that it, like any other mechanical device, can be potentially dangerous if used improperly. Hazard control and accident prevention are dependent upon the awareness, concern, prudence and proper training of personnel involved in the operation, transport, maintenance and storage of the equipment. Study this manual and pay special attention to the important Safety Precautions on pages 3-5. Following these instructions will help you continue to enjoy the trouble-free performance expected of the ***Country Clipper*** product.

P-13108

TABLE OF CONTENTS

SAFETY *3*
ACCIDENT PATTERNS TO AVOID 3
SAFETY INSTRUCTIONS AND RECOMMENDATIONS 3
SAFETY INTERLOCK SYSTEM 5

START UP AND OPERATION *5*
CHECKLIST BEFORE OPERATION 5
CONTROL LOCATIONS JOYSTICK MODELS 6
OPERATION JOYSTICK MODELS 7
CONTROL LOCATIONS TWINSTICK MODELS 8
OPERATION TWINSTICK MODELS 9
MOWING RECOMMENDATIONS 11

MAINTENANCE *12*
MAINTENANCE SCHEDULE 12
MAINTENANCE INSTRUCTIONS 13
PROCEDURE FOR RAISING AND LOWERING THE DECK FOR SERVICING 18
LEVELING THE DECK 20

TROUBLE SHOOTING CHECK LIST *21-22*

BELT ROUTINGS *23*

WIRING SCHEMATIC FOR KOHLER JOYSTICK (E-6405) *24*

WIRING SCHEMATIC FOR KAWASAKI JOYSTICK (E-6415 + E-6417ADAPTER)……..*25*

WIRING SCHEMATIC FOR KAWASAKI TWINSTICK (E-6416 + E-6417 ADAPTER). *26*

WIRING SCHEMATIC FOR KOHLER TWINSTICK (E-6416 + E-6436)……..……...*27*

NOTES / SERVICE RECORDS *28*

MODEL NUMBER'S & SERIAL NUMBER'S

Date of Purchase: _____

Mower Model Number: _____

Mower Serial Number: _____

Engine Spec Number: _____

Hydro Serial Number (RH): _____

Hydro Serial Number (LH): _____

SAFETY

ACCIDENT PATTERNS TO AVOID

I. **CONTACT WITH THE ROTATING BLADE --** This accident usually happens when the operator is clearing the discharge chute of grass, (especially when the grass is wet), or when the operator adjusts the machine without turning it off and waiting for the blades to completely stop.

II. **PROPELLED OBJECTS --** Sticks, rocks, wires, and other objects can be propelled out through the discharge chute or from under the mower housing. Bystanders are particularly vulnerable.

III. **GRASS CATCHER OR GUARD --** The mower shall not be operated without either the entire grass catcher or guard in place.

IV. **OVERTURNING --** This happens when riding mowers are used on steep slopes, embankments or hills. The operator in these cases can come in contact with the blades or sustain injuries during a fall.

V. **MOWER RUNNING OVER THE VICTIM --** This usually happens when a riding mower is driven in reverse. The accident victims are most often young children whom, unseen by the operator of the mower, were in the area being mowed.

AT ***COUNTRY CLIPPER***, WE SHARE YOUR DESIRE TO PROTECT YOURSELF, YOUR FAMILY, YOUR FRIENDS AND YOUR NEIGHBORS FROM ACCIDENTAL INJURY. OBSERVING AND ENFORCING THE FOLLOWING GUIDELINES WILL HELP TO INSURE THE SAFETY OF EVERYONE.

PLEASE BE CAREFUL!

SAFETY INSTRUCTIONS AND RECOMMENDATIONS

1. **PEOPLE WHO OPERATE, SERVICE, OR ARE OTHERWISE ASSOCIATED** with the ***Country Clipper*** Zero Turn Radius Mower should be trained in its proper use and warned of its dangers. Before operating, adjusting, or servicing the ***Country Clipper*** Zero Turn Radius Mower they should read and understand this entire manual and the engine owner's manual.

2. **AVOID CONTACT WITH MOVING PARTS.** Keep hands and feet from under mower deck and away from blades at all times. Turn engine (motor) off if you must unclog the chute.

3. **AVOID HILLS AND SLOPES.** Use extreme caution when mowing up or down slopes. NEVER mow across the face of a slope. If a slope must be ascended, back up the slope; drive forward when descending. Reduce speed and use caution to start, stop and maneuver. To prevent loss of control on a slope avoid sharp turns, sudden changes in direction, and sudden stops and starts.

4. **DISENGAGE POWER TO MOWER BEFORE BACKING UP.** Do not mow in reverse unless ABSOLUTELY necessary and then only after turning around and observing the entire area behind the mower. Go slowly. Most "running over victim" accidents occur in reverse.

5. **BEGINNING OPERATORS SHOULD LEARN HOW TO STEER** the ***Country Clipper*** Zero Turn Radius Mower before attempting to mow. Start with slow engine speed and drive without the blades engaged in an open area until comfortable with the machine.

6. **KNOW HOW TO STOP QUICKLY.** Know the location and operation of every control, especially how to brake and how to disengage the mower blades.

7. **DO NOT MOVE CONTROL LEVER(S)** from forward position to reverse position rapidly. The speed and/or direction of

travel is affected instantly by movement of the Control Lever(s).

8. **DO NOT ALLOW CHILDREN TO OPERATE MOWER.** Do not allow others who have not had instruction to operate mower.

9. **ALWAYS TURN ENGINE OFF AND REMOVE KEY** before leaving the mower to prevent children and inexperienced operators from starting the engine. Never leave the mower unattended with engine running. Always wait for all moving parts and all sounds to stop before leaving operator's seat.

10. **WEAR STURDY, ROUGH-SOLED WORK SHOES AND CLOSE-FITTING SLACKS AND SHIRTS.** Never operate mower in bare feet, sandals or sneakers.

11. **KNOW THE AREA YOU ARE TO MOW.** Watch for hidden danger such as rocks, roots, sticks, holes, bumps, and drop-offs, etc. Before mowing, pick up all debris in area to be mowed. Sharp and hard objects can be propelled at a high speed and can act like shrapnel. Walk through tall grass BEFORE MOWING to make sure there are no hidden dangers. Mow higher than desired in tall grass to expose any hidden objects and/or obstacles, clean the area, and then mow to the desired height.

12. **NEVER REFUEL A MOWER INDOORS.** Allow the engine time to cool before refueling. Unseen vapors may be ignited by a spark. Always clean up spilled gasoline. Never run the engine indoors in a garage or any other closed building. Allow engine to cool before storing in any enclosure. The engine exhaust and gasoline fumes are dangerous.

13. **DISENGAGE BLADES BEFORE DRIVING ACROSS WALKS** or projecting objects.

14. **NEVER REMOVE THE FUEL CAP** or add gasoline to a running or hot engine that has not been allowed to cool for several minutes after running. Always make sure the gas cap is in place.

15. **NEVER CARRY PASSENGERS.**

16. **DO NOT SMOKE AROUND THE MOWER** or the gasoline storage container. Gasoline fumes can easily ignite.

17. **KEEP GASOLINE IN A WELL-VENTILATED AREA** away from your living quarters and in tightly-capped safety cans. Never store mower with gasoline in the tank inside a building where fumes may reach open flame or spark.

18. **DISENGAGE BLADES, STOP ENGINE AND REMOVE IGNITION KEY** before any servicing. Be sure all moving parts and all sounds have stopped. Let engine cool and disconnect the spark plugs so the engine cannot start by accident. A SLIGHT ROTATION OF THE BLADES COULD START THE ENGINE.

19. **KEEP ALL NUTS, BOLTS, AND SCREWS TIGHT** to be sure equipment is in safe working condition, especially blade mounting bolts.

20. **MOWER SHOULD BE STOPPED AND INSPECTED FOR DAMAGE** after striking a foreign object and the damage should be repaired before restarting and operating the equipment. Stop immediately and check for damage or loose parts if mower should start vibrating.

21 **KEEP SAFETY DEVICES AND GUARDS IN PLACE.** If any of the safety switches become inoperable, have them repaired immediately.

22. **DO NOT STEP OR STAND ON THE MOWER HOUSING.** Step or stand only on the foot deck.

23. **WATCH OUT FOR TRAFFIC** near roadways and when crossing roads.

24. **DO NOT USE MOWER WHEN GRASS IS WET OR SLIPPERY.**

25. **THIS MACHINE IS NOT MEANT FOR HIGHWAY OR STREET USE.** It is not a recreational vehicle and it should not be operated as such.

26. **ALWAYS DISENGAGE THE MOWER BLADE CLUTCH** when transporting.

27. **KEEP ALL SAFETY LABELS IN LEGIBLE CONDITION.** Remove grease, dirt, grass, etc. that may cover safety labels. Replace any safety label that is missing or damaged.

28. **WEAR PERSONAL PROTECTIVE EQUIPMENT.** Eye, ear, feet and head protection is recommended.

29. **ONLY USE COUNTRY CLIPPER APPROVED ACCESSORIES.**

30. **DO NOT CHANGE THE ENGINE GOVERNOR SETTING** or over speed the engine.

31. **BEWARE OF MOWER DISCHARGE DIRECTION** and do not point it at anyone.

32. **DO NOT OPERATE THE MOWER UNDER THE INFLUENCE OF ALCOHOL OR DRUGS.**

33. **USE CARE WHEN LOADING OR UNLOADING MACHINE INTO A TRAILER OR TRUCK.**

34. **USE CARE WHEN APPROACHING BLIND CORNERS,** shrubs, trees, or other objects that may obscure vision.

35. **CLEAN ALL GRASS AND DEBRIS FROM MACHINE TO PREVENT FIRES.** Remove spilled oil or gasoline.

36. **KEEP HANDS AND FEET AWAY FROM MOVING PARTS.** If possible do not make adjustments with the engine running.

37. **NEVER MOW WHEN OTHER PEOPLE OR PETS ARE IN THE AREA.**

38. **CAREFULLY RELEASE PRESSURE FROM COMPONENTS WITH STORED ENERGY.**

39. **USE CARE WHEN REPLACING BLADES.** Wrap the blade(s) or wear gloves, and use caution when servicing them. Only replace blade(s). Never straighten or weld blade(s).

40. **USE JACK STANDS TO SUPPORT COMPONENTS** when required.

SAFETY INTERLOCK SYSTEM

Your ***Country Clipper*** Zero Turn Radius Mower is equipped with switches interlocked for your safety.

ON JOYSTICK MODELS GROUND DRIVE NEUTRAL IS WHEN THE JOYSTICK (CONTROL LEVER) IS IN THE **"DOWN"** POSITION.

ON TWINSTICK MODELS GROUND DRIVE NEUTRAL IS WHEN BOTH CONTROL LEVERS ARE IN THE **"OUT"** POSITION.

1. The mower blades must be disengaged and the Control Lever(s) must be in the neutral position before the engine will start.

2. The engine will stop if the mower blade clutch is engaged when the operator leaves the driver's seat.

3. The engine will stop if the Control Lever(s) are not in the neutral position when the operator leaves the driver's seat.

4. The engine will stop if the brake is **"SET"** and the Control Lever(s) are not in the neutral position.

5. The engine will stop if the brake is **"SET"** and the mower blade clutch is engaged.

DO NOT OPERATE MOWER IF SAFETY SWITCHES AND GUARDS ARE NOT OPERATING PROPERLY

START UP AND OPERATION

CHECKLIST BEFORE OPERATION

1. Make sure fuel tank is full. Use regular unleaded gasoline (see engine owner's manual for more details).

WARNING

HANDLE GASOLINE WITH CARE -- IT IS HIGHLY FLAMMABLE. DO NOT SMOKE. ENGINE SHOULD BE OFF AND COOL. USE APPROVED GAS CONTAINER. NEVER FILL TANK INDOORS. WIPE UP ANY SPILLS. REPLACE CAP TIGHTLY.

2. Make sure dirt and foreign matter is kept out of gas tank. Use a clean funnel and gas can.

3. Do not mix oil with gasoline.

4. Do not use white, high test or premium gasoline. Do not use de-icers, carburetor cleaners, or other such additives.

5. Check the crankcase oil level. Make sure the engine is off. The mower should be parked on a level area. Do not overfill. (See your engine manual for more detailed instruction.)

6. Check battery fluid level.

7. Inspect V-belts.

8. Check tire pressure:

9. Make sure underside of mower deck is free of grass.

10. Make sure mower blades are sharp and secured tightly.

11. Clean the air intake screen on the engine if necessary.

12. Perform any other maintenance as it becomes necessary. (See the "Maintenance" section of this manual.)

IMPORTANT: Before cutting grass, clutch must be broken-in as follows: With engine at full RPM engage deck until blades come to full speed and then disengage until blades come to a complete stop. Repeat 10 times to "break-in" the clutch properly.

CONTROL LOCATIONS

JOYSTICK MODELS

SINGLE CYLINDER ENGINE

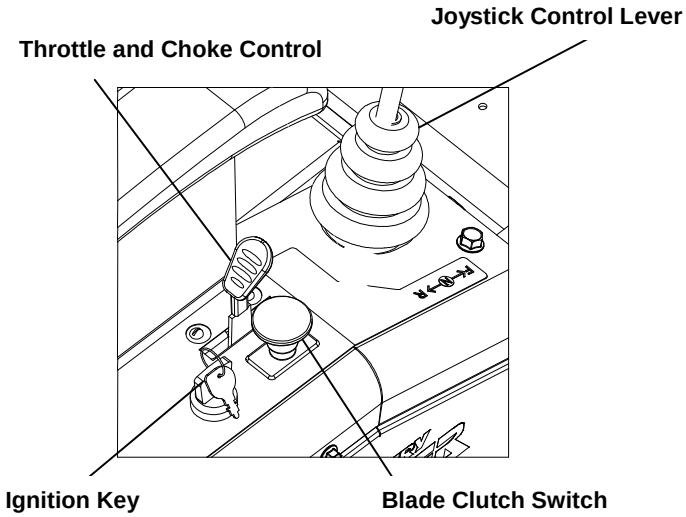

TWIN CYLINDER ENGINE

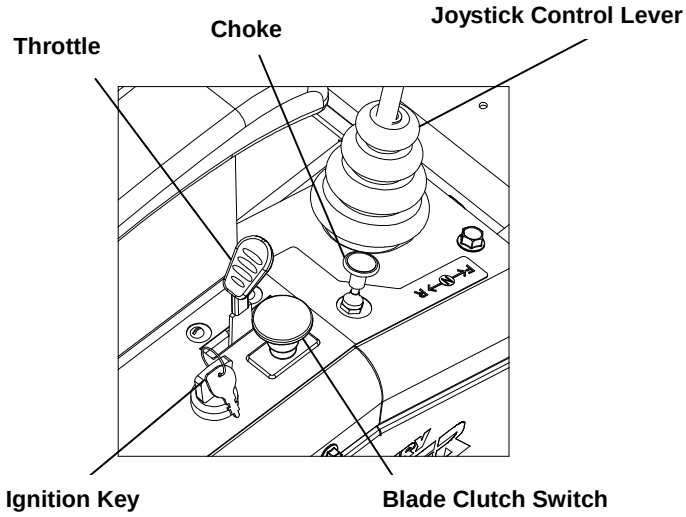

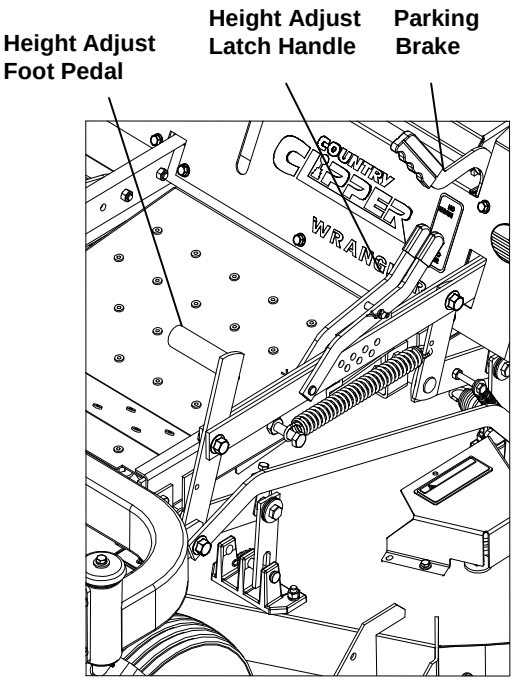

WARNING

AVOID INHALING EXHAUST FUMES! CARBON MONOXIDE GAS IS COLORLESS, ODORLESS AND CAN CAUSE UNCONSCIOUSNESS AND IS POTENTIALLY LETHAL. DO NOT RUN LAWN MOWER IN GARAGE OR OTHER CONFINED AREAS.

OPERATION

JOYSTICK MODELS

1. **MOVE JOYSTICK CONTROL LEVER** to neutral "DOWN" position.

2. **SET PARKING BRAKE**. Pull up to set.

3. **DISENGAGE MOWER BLADE CLUTCH** by moving clutch switch to "OFF" position.

4. **PUSH ENGINE THROTTLE / CHOKE CONTROL** to full position for cold starts on single cylinder engines or **PULL ENGINE CHOKE CONTROL** to full position for cold starts on twin cylinder engines.

5. **SET ENGINE THROTTLE TO 1/2 THROTTLE** on twin cylinder models**.**

6. **TURN IGNITION KEY to "START"** position and release to "RUN" as soon as engine starts. NOTE: Prolonged cranking will damage starter motor and shorten the battery life

7. **ADJUST ENGINE THROTTLE** for desired engine smoothness and speed. However, use full throttle while mowing.

8. **RELEASE PARKING BRAKE.** Push brake lever down to release.

IMPORTANT:

Until the operator is familiar with the ***Country Clipper*** Zero Turn Radius Mower, he/she should follow these recommendations: **1)** Disengage the mower blades. **2)** Go very slowly until thoroughly familiar with the machine. **3)** Keep away from fences, buildings, and other obstructions. **4)** Move the Joystick Control Lever smoothly and slowly. **5)** Practice until operation is smooth and efficient.

9. **TO DRIVE:**

   A. Move the Joystick Control Lever to the "UP" position.

   B. Move the Joystick Control Lever forward to move forward. Increasing forward movement of the Joystick Control Lever will increase the speed of travel.

   C. To reverse the direction, pull the Joystick Control Lever slightly back.

   D. To turn, move the Joystick Control Lever toward the direction you want to turn.

   E. To turn on a zero radius axis, go slowly and move the Joystick Control Lever to the side you wish to turn and slightly to the rear at the same time.

CAUTION

FOR SMOOTH, SAFE OPERATION, MOVE THE JOYSTICK CONTROL LEVER IN A GENTLE, SLOW MOTION. NEVER PULL OR PUSH THE JOYSTICK CONTROL LEVER RAPIDLY, ESPECIALLY ON GRADES.

10. **BRAKING:** To brake mower, gently move the Joystick Control Lever in the direction opposite to travel. Note: If the parking brake is engaged with the Joystick Control Lever in the “UP” position the engine will stop.

11. **CUTTING HEIGHT ADJUSTMENT:** Push the Height Adjustment Foot Pedal forward until Height Adjustment Latch Handle engages the Latch Plate. Move the Height Adjustment Pin to the desired cutting height hole. Push and hold the Height Adjustment Foot Pedal forward while raising the Height Adjustment Latch Handle to disengage from the Latch Plate. Slowly lower the Height Adjustment Foot Pedal until the Height Adjustment Pin contacts the Latch Plate.

12. **ENGAGE MOWER BLADE CLUTCH:** Set engine throttle to 1/2–3/4 throttle, engage the Blade Clutch Switch to the “ON” position, set throttle to full. Note: The engine will not start with the blade clutch switch in the “ON” position. Engine will stop if the clutch switch is “ON” and the Operator is not in the seat.

CAUTION

AVOID HILLS AND SLOPES. USE EXTREME CAUTION WHEN MOWING UP OR DOWN SLOPES. NEVER MOW ACROSS THE FACE OF A SLOPE. IF A SLOPE MUST BE ASCENDED, BACK UP THE SLOPE; DRIVE FORWARD WHEN DESCENDING.

13. **TO STOP:**

    A. Move Joystick Control Lever to neutral position and then to the “DOWN” position.

    B. Disengage the mower blade clutch by moving the clutch to the “OFF” position.

    C. Set the parking brake.

    D. Turn ignition key to “OFF” position.

    E. Remove the key and wait for all movement and sound to cease before dismounting.

CONTROL LOCATIONS

TWINSTICK MODELS

SINGLE CYLINDER ENGINE

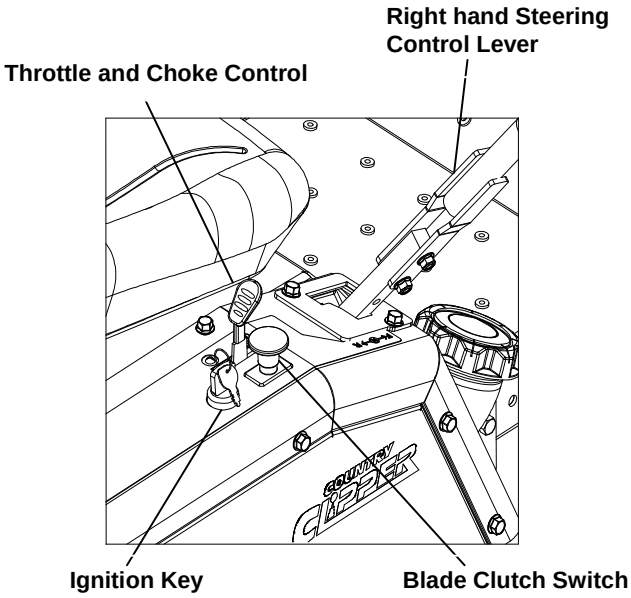

TWIN CYLINDER ENGINE

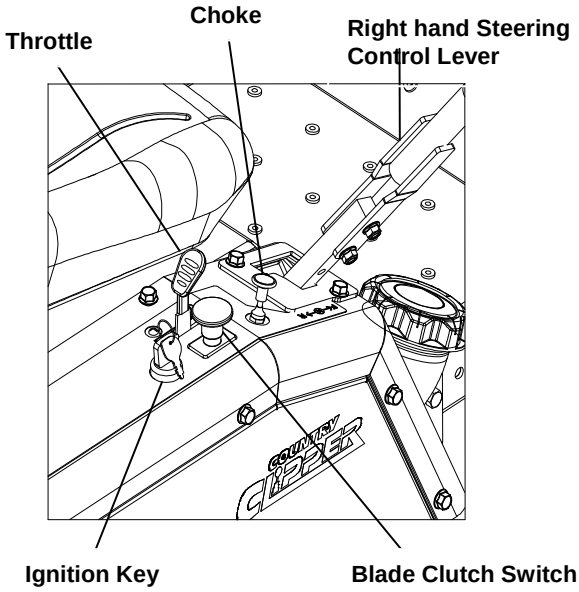

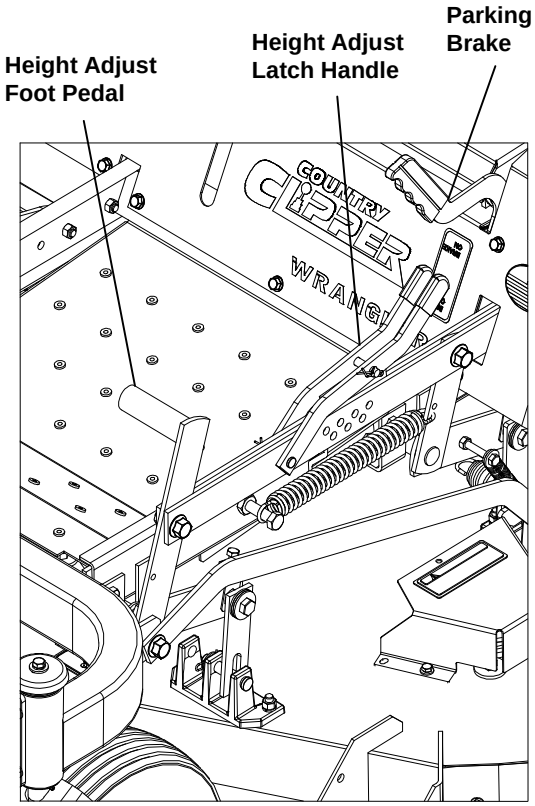

WARNING

AVOID INHALING EXHAUST FUMES -- CARBON MONOXIDE GAS IS COLORLESS AND ODORLESS, AND CAN CAUSE UNCONSCIOUSNESS, AND IS POTENTIALLY LETHAL. DO NOT RUN LAWN MOWER IN GARAGE OR OTHER CONFINED AREA.

OPERATION
TWINSTICK MODELS

1. **MOVE STEERING CONTROL LEVERS** to neutral “OUT” position.

2. **SET PARKING BRAKE.** Pull up to set.

3. **DISENGAGE MOWER BLADE CLUTCH** by moving clutch switch to “OFF” position.

4. **PUSH ENGINE THROTTLE / CHOKE CONTROL** to full position for cold starts on single cylinder engines or **PULL ENGINE CHOKE CONTROL** to full position for cold starts on twin cylinder engines.

5. **SET ENGINE THROTTLE TO 1/2 THROTTLE** on twin cylinder models**.**

6. **TURN IGNITION KEY** to “START” position and release to “RUN” as soon as engine starts. NOTE: Prolonged cranking will damage starter motor and shorten the battery life.

7. **ADJUST ENGINE THROTTLE** for desired engine smoothness and speed. However, use full throttle while mowing.

8. **RELEASE PARKING BRAKE.** Push brake lever down to release.

IMPORTANT:

Until the operator is familiar with the ***Country Clipper*** Zero Turn Radius Mower, he/she should follow these recommendations: **1)** Disengage the mower blades. **2)** Go very slowly until thoroughly familiar with the machine. **3)** Keep away from fences, buildings, and other obstructions. **4)** Move the Steering Control Lever smoothly and slowly. **5)** Practice until operation is smooth and efficient.

9. **TO DRIVE:**
   - **A.** Move the Steering Control Levers to the “IN” position.
   - **B.** Move the Steering Control Levers forward to move forward. Increasing forward movement of the Steering Control Levers will increase the speed of travel.
   - **C.** To reverse the direction, pull the Steering Control Levers slightly back.
   - **D.** To turn, move one Steering Control Lever slightly ahead of the other.
   - **E.** To turn on a zero radius axis, go slowly and move one Steering Control Lever forward and one Steering Control Lever rearward. (For a right hand turn the left hand Steering Control Lever will be ahead of the right hand Steering Control. For a left hand turn the right hand Steering control will be ahead of the left hand Steering Control.)

CAUTION

FOR SMOOTH, SAFE OPERATION, MOVE THE STEERING CONTROL LEVER(S) IN A GENTLE, SLOW MOTION. NEVER PULL OR PUSH THE STEERING CONTROL LEVER(S) RAPIDLY, ESPECIALLY ON GRADES.

10. **BRAKING:** To brake mower, gently move the Steering Control Levers in the direction opposite to travel. NOTE: If the parking brake is engaged with the Steering Control Lever(s) in the "IN" position the engine will stop.

11. **CUTTING HEIGHT ADJUSTMENT:** Push the Height Adjustment Foot Pedal forward until Height Adjustment Latch Handle engages the Latch Plate. Move the Height Adjustment Pin to the desired cutting height hole. Push and hold the Height Adjustment Foot Pedal forward while raising the Height Adjustment Latch Handle to disengage from the Latch Plate. Slowly lower the Height Adjustment Foot Pedal until the Height Adjustment Pin contacts the Latch Plate.

12. **ENGAGE MOWER BLADE CLUTCH:** Set engine throttle to 1/2–3/4 throttle, engage the Blade Clutch Switch to the "ON" position, set throttle to full. Note: The engine will not start with the blade clutch switch in the "ON" position. Engine will stop if the clutch switch is "ON" and the Operator is not in the seat.

CAUTION

AVOID HILLS AND SLOPES. USE EXTREME CAUTION WHEN MOWING UP OR DOWN SLOPES. NEVER MOW ACROSS THE FACE OF A SLOPE. IF A SLOPE MUST BE ASCENDED, BACK UP THE SLOPE; DRIVE FORWARD WHEN DESCENDING.

13. **TO STOP:**
    - **A.** Move Steering Control Levers to neutral position and then to the "OUT" position.
    - **B.** Disengage the mower blade clutch by moving the clutch to the "OFF" position.
    - **C.** Set the parking brake.
    - **D.** Turn ignition key to "OFF" position.
    - **E.** Remove the key and wait for all movement and sounds to cease before dismounting.

CAUTION

WHEN LEAVING THE MOWER UNATTENDED, ALWAYS REMOVE THE KEY AND SET THE PARKING BRAKE, EVEN IF JUST FOR A FEW MOMENTS. HELP PROTECT CHILDREN AND OTHER UNAUTHORIZED PERSONS FROM ACCIDENTS.

OPERATION

FREE WHEEL

1. **TO FREE WHEEL:**
    - **A.** Unlock Transmission: Pull the Transmission Release Chain out away from the Hydrostatic Drive Axle and then over into the retaining slot (each side must individually be pulled out and over into the retaining slot).
    - **B.** To re-engage the transmissions push the Transmission Release Chain out of the retaining slot.

      Transmission Release Chains are located on the rear side of the Hydrostatic Drive Axles and below the Engine Mounting Plate.

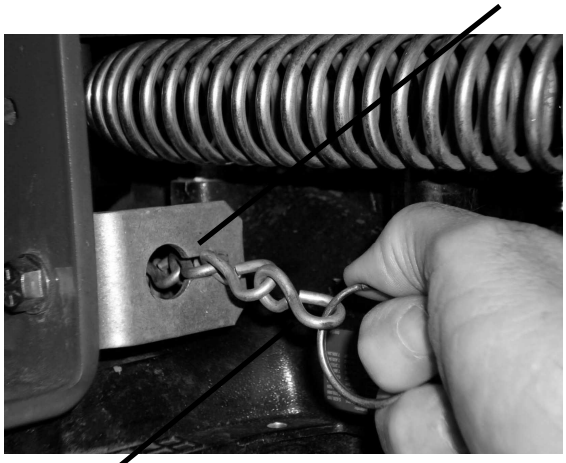

NOTE: The tractor should never be pulled at more than 2 miles per hour or for any appreciable distance.

CAUTION

NEVER OPERATE MOWER WITHOUT DISCHARGE CHUTE IN PLACE.

MOWING RECOMMENDATIONS

1. Keep mower blades sharp.

2. Make sure deck and discharge are clean.

CAUTION

TURN ENGINE OFF AND WAIT FOR ALL MOVING PARTS TO STOP BEFORE CLEANING DISCHARGE CHUTE.

3. When mowing tall grass, make two passes. Mow off ½ of the desired cut on the first pass, and then the desired height the second pass. Check for hidden dangers.

4. Go slowly for trimming.

5. Always cut grass with the engine at full throttle speed.

NOTE: Operating the engine at full throttle assures that the cutting blades are operating at optimum cutting speed. Control ground speed with the Control Lever(s).

6. Vary ground speed to suit conditions (i.e. go slower in tall thick grass, on hills, wet conditions, etc.).

MAINTENANCE

CAUTION

BEFORE PERFORMING ANY MAINTENANCE, TURN OFF ENGINE REMOVE KEY AND DISCONNECT SPARK PLUGS. USE EXTREME CARE WHEN WORKING ON MACHINERY. DO NOT WEAR WATCHES OR JEWELRY. DO NOT WEAR LOOSE FITTING CLOTHES, AND OBSERVE ALL COMMON SAFETY PRACTICES WITH TOOLS.

Maintenance Service Interval	Maintenance Procedure
Before Each Use or Daily	☐ Check Engine Oil Level. ☐ Check Mower Blades. ☐ Check Operator Presence Control System. ☐ Check for Loose Hardware. ☐ Clean Engine Cooling System. ☐ Remove Debris From Engine. ☐ Remove Debris Build-Up Hydrostatic Transmission & Cooler
After Each Use or Daily	☐ Clean Grass Build-Up from Deck Cutting Chamber.
After First 5 Hours	☐ Change Engine Oil.
After First 100 Hours	☐ Check Wheel Lug Nuts. (75 ft/lbs or 102 Nm) ☐ Change Hydraulic Filter.
Every 10 Hrs	☐ Check Tire Pressure. (12 Psi / 83 kPa) ☐ Check Battery Fluid ☐ Sharpen Mower Blades
Every 25 Hours	☐ Service Air Cleaner. (Increase Frequency Under Severe Conditions. See Engine Owner's Manual for additional information.)
Every 50 hours	☐ Check Hydraulic Oil Level. ☐ Check Drive Belt Condition. ☐ Check Engine RPM (3500-3600 rpm)
Every 100 hours	☐ Change Engine Oil & Filter. (Increase Frequency Under Severe Conditions. See Engine Owner's Manual for Additional Information.) ☐ Remove Engine Shrouds & Clean Cooling Fins. ☐ Check Spark Plug ☐ Check Wheel Lug Nuts. (75 ft/lbs or 102 Nm)
Every 400 Hours	☐ Change Hydrostatic Transmission Oil & Filter
Every 500 Hours Or Annually	☐ Grease Front Caster Pivots ☐ Replace Air Filter Element ☐ Check Spark Plugs ☐ Service Battery

Replace Safety decals when illegible. Write factory for free replacement.

MAINTENANCE INSTRUCTIONS

1. ENGINE:

For complete maintenance and operating information for your engine, please refer to your engine operating and maintenance instructions furnished by the engine manufacturer and included in your ***Country Clipper*** Zero Turn Radius Mower information packet.

NOTE: Air intake screen must be kept clean. If plugged, engine may be seriously damaged by overheating.

2. BATTERY:

CAUTION

BATTERY ELECTROLYTE IS A POISONOUS AND CORROSIVE SULFURIC ACID SOLUTION. AVOID SPILLING ON SKIN, EYES, AND CLOTHING.

Keep the electrolyte level above the plates in each cell by adding distilled water as it becomes necessary. Add water just before operating the mower to mix the water with the solution. Be careful not to overfill the battery -- the electrolyte solution is corrosive and can cause damage to surrounding metal parts if it should spill. When taking the battery out of the mower for servicing, make sure to connect the cables to the battery exactly as they were prior to removal. Always disconnect the ground (**-**) wire **first** and always reconnect the ground (**-**) wire **last.**

Keep the battery clean. Remove the corrosion around the battery terminals by applying a solution of one part baking soda to four parts water. Coat all exposed terminal surfaces with a light layer of grease or petroleum jelly to prevent corrosion.

NOTE: At temperatures below 32 degrees F (0 degrees C) the full charge state must be maintained to prevent cell electrolyte from freezing and causing permanent battery damage.

3. TIRES:

Correct tire pressure is essential for efficient operation of the mower. Check tire pressure as requested in the maintenance schedule. Inflate tires to the pressures listed below:

Model	Front tires	Rear tires
All Models	12 psi	12 psi

Lug nuts should be torqued to 75 ft/lbs and checked regularly for tightness.

4. MOWER BLADES:

Check sharpness of mower blades after every 10 hours of operation. To sharpen blades proceed as follows:

CAUTION

STOP ENGINE, REMOVE IGNITION KEY AND SPARK PLUGS FOR SAFETY.

A. Remove bolt and blade washer mounting blade on shaft. Remove blade.

B. Blades should be discarded when worn excessively.

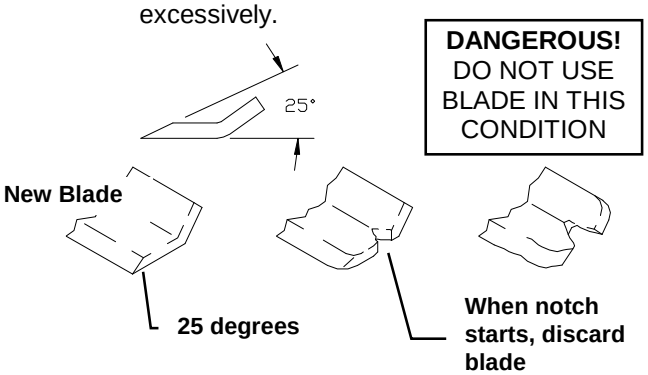

C. Sharpen blades with a hand file, electric grinder or blade sharpener. Wear gloves and eye protection when sharpening. Grind blade at original 25 degree bevel.

D. Check balance of blade by positioning the blade on a nail or blade balance pedestal. Grind the blade on the end that is heavier until both sides balance.

E. Install blade, blade washer and bolt. Make sure to torque bolt to 100 ft-lbs.

5. V-BELTS:

All belts should be checked every 50 hours. Replace any belts found to be in poor condition. All belts are equipped with spring loaded belt tighteners and do not require tightening adjustments.

6. LUBRICATION:

A. Engine: Follow engine manufacturer's recommendation.

B. Front Caster Pivots: Lubricate fittings with several pumps of multi-purpose grease from a grease gun. (p.19)

7. PARKING BRAKE ADJUSTMENT:

A. Move Parking Brake Lever to the "OFF" position.

B. Adjust the top Adjustment Nut down or up so that the Brake Rod Arm is fully extended downward.

C. **Move Parking** Brake Lever to the "ON" position.

D. Adjust the Bottom Adjustment Nut so that the compression spring is compressed to 5/8".

Repeat for the other side.

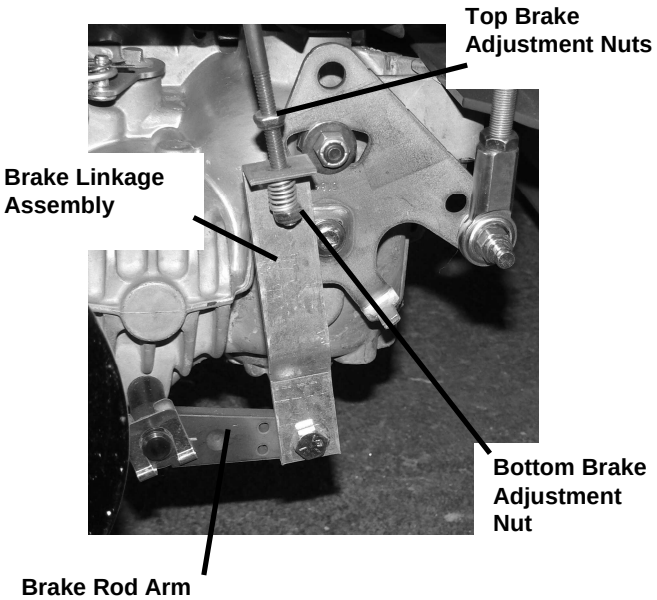

8. JOYSTICK CONTROL LEVER NEUTRAL ADJUSTMENT:

With the engine running, if the machine travels in either direction when the Joystick Control Lever is in the neutral "DOWN" position, stop the engine, securely elevate the rear wheels clear of the ground and adjust as follows:

TO ADJUST RIGHT HAND SIDE:
(see next page for illustration)

A. Remove the right hand fender skirt exposing the Joystick Control Lever Assembly.

B. Start and run engine at fast idle with Joystick Control Lever in the "DOWN" position.

C. Loosen the locknuts tightened against the Upper Rod End Ball Joint and Adjusting Coupler on the Upper Linkage Rod Assembly.

NOTE: One of these is a left hand nut and will have to be turned backwards.

NOTE: Use 2 wrenches (one on the Adjusting Coupler and one on the locknut) when loosening locknuts to prevent damage to Rod End Ball Joints.

D. Adjust the neutral position by turning the Adjusting Coupler until the wheel stops turning.

E. Retighten the locknuts and check to make sure the drive wheel is still not turning.

NOTE: Use 2 wrenches (one on the Adjusting Coupler and one on the locknut) when tightening locknuts to prevent damage to Rod End Ball Joints.

F. Shut off engine before removing from blocks. Replace fender skirt.

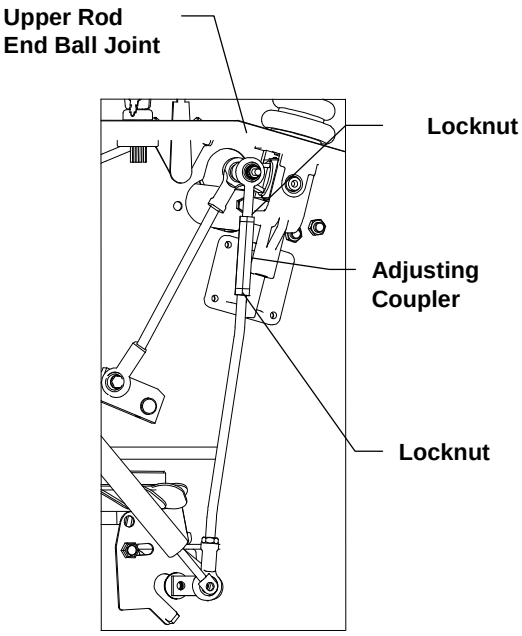

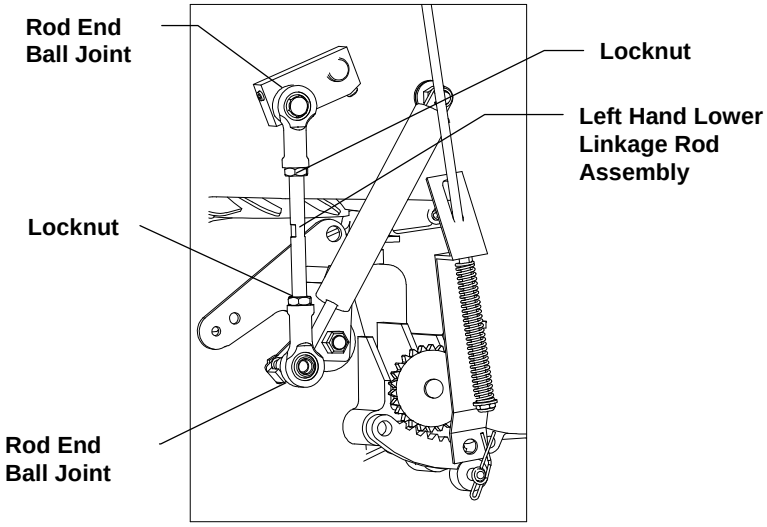

TO ADJUST LEFT HAND SIDE:

G. Start and run engine at fast idle with Joystick Control Lever in the “DOWN” position.

H. Loosen locknuts tightened against the Rod End Ball Joints on the Left Hand Lower Linkage Rod Assembly.

NOTE: One of these is a left hand nut and will have to be turned backwards.

NOTE: Use 2 wrenches (one on the Rod End Ball Joint and one on the locknut) when loosening locknuts to prevent damage to Rod End Ball Joints.

I. Adjust neutral position by turning rod in the Left Hand Lower Linkage Rod Assembly until the wheel stops turning.

J. Retighten the locknuts and check to make sure the drive wheel is still not turning.

NOTE: Use 2 wrenches (one on the Rod End Ball Joint and one on the locknut) when tightening locknuts to prevent damage to Rod End Ball Joints.

K. Shut off engine before removing from blocks.

9. JOYSTICK CONTROL LEVER SENSITIVITY ADJUSTMENT

To change the sideways turning response adjust as follows:

A. Remove the right hand fender skirt exposing the Joystick Control Lever assembly.

B. Remove the cross bolt, nut, and spacers

C. Reassemble the spacers as desired. (2) spacers between the rod end ball joints and the joystick pivot shaft will quicken the side to side response, (1) spacer slows the response.

NOTE: It is important that there is at least one spacer on each side of the rod end ball joints to prevent damage. Also the small diameter of the spacer must point towards the rod end ball joint.

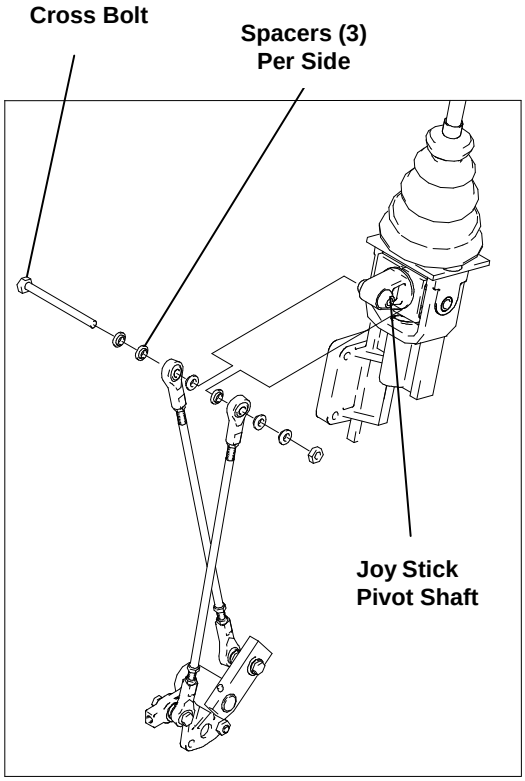

10. JOYSTICK CONTROL LEVER DETENT ADJUSTMENT:

If the Joystick Control Lever does not lock in the “UP” position, turn the detent adjustment screw clockwise until a desirable locking action is obtained. If the Joystick Control Lever is hard to slide up and down, turn the detent adjustment screw counter-clockwise until a desirable sliding action is obtained.

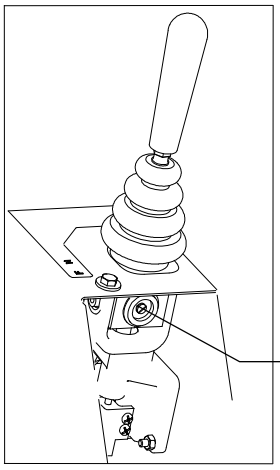

11. ADJUSTING FOR STRAIGHT FORWARD TRACKING:

In a large open area, actuate the Control lever(s) into the full forward position. If the mower veers in either direction left or right some adjustment is necessary. If the mower veers *to* the right, then the right hydrostat needs to be sped up. If the mower veers to the left, then the left hydrostat needs to be sped up. (The tracking adjustment is made using the cam blocks).

A. Stop the machine and shut off the engine.

B. Increase the control ramp-up speed of the slower side:

CAM BLOCK ADJUSTMENT

On the side that needs to be sped up:

1. Loosen the cam block bolt.
2. Rotate the block upward.
3. Retighten the cam block bolt.
4. Readjust the linkage to find neutral.
5. Recheck ground speed tracking.

C. Once tracking is to the operators acceptance, readjust neutral as needed. (See page 14 & 15).

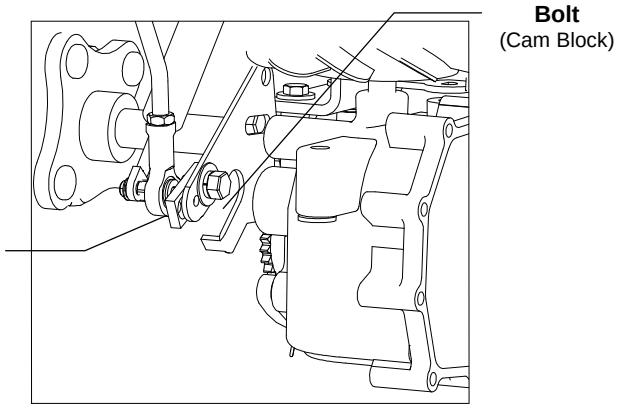

12. TWINSTICK CONTROL LEVER NEUTRAL ADJUSTMENT:

A. Loosen the bolts holding the Neutral Plate.
B. Pull back the control lever until the wheel spin is zero.
C. Tilt the Control lever outward, using the lever, position and tighten the bolts holding the Neutral Plates.

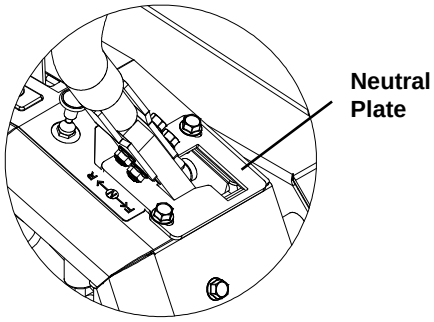

13. TWINSTICK CONTROL LEVER FORWARD TRACKING:

In a large open area, actuate the Twinstick Control levers into the full forward position. If the mower veers in either direction left or right some adjustment is necessary. If the mower veers to the right, then the left transmission needs to be slowed down. If the mower veers to the left then the right transmission needs to be slowed down.

A. Stop the machine and shut off the engine.
B. Slightly loosen the nuts around the turnbuckle on the faster side. Lengthen the lower linkage rod by ¼ turn increments, retighten and retest, until the mower tracks straight.
C. Once the tracking is to the operators liking, completely tighten the nuts on the turnbuckle. Recheck and adjust the Neutral Plate if required.
D. Reinstall the fender skirts and tighten all bolts.

14. TO ADJUST "IN" OR OPERATING POSITION OF THE TWINSTICK STEERING CONTROL LEVERS:

If the Control levers are too close in the center or the Control Levers Drag on the Neutral Plate, adjust as follows:

A. Tilt the Control Lever outward, loosen the lock nut and adjust the bolt until the gap between the handles is correct or the Control lever does not rub on the Neutral Plate.
B. Tighten the lock nut after the adjustment is made.

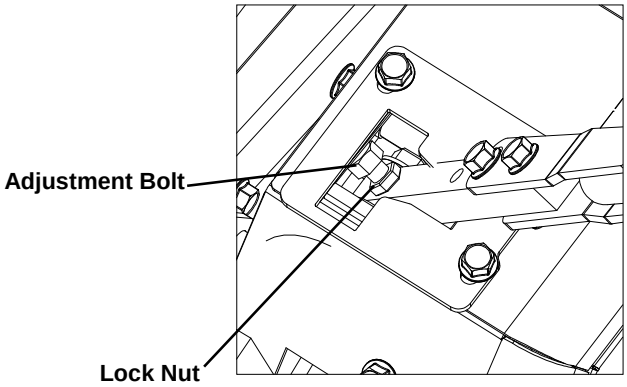

15. HYDROSTATIC TRANSMISSIONS:

Before each use, check to be sure that the cooling surfaces of the Hydrostatic Transmissions are clean. Excessive accumulation of oil, dirt, or trash may cause the transmissions to overheat.

NOTE: NEVER WASH ACROSS VENT HOSE AREA OR SHAFT SEALS WITH WATER OR STEAM.

PROCEDURE FOR RAISING AND LOWERING THE DECK FOR SERVICING

(see next page for illustrations)

1. RAISING THE DECK:

A. Push Height Adjustment Foot Pedal forward until the Height Latch Handle engages Latch Plate. Remove Cut Height Adjustment Pin. Push and hold the Height Adjustment Foot Pedal forward while raising the Height Adjustment Latch Handle to disengage from the Latch Plate. Slowly lower the Height Adjustment Foot Pedal until Deck rests on the ground. Ensure that Height Latch Handle engages retaining slot located in top of Latch Plate.

B. Carefully rotate the Deck Belt Tension Lever to release tension on the Deck Belt. Remove the engine to deck Drive belt from the clutch on the engine.

C. Using Deck Drag Bar as a handle, lift rear corner of the Deck and disconnect the Rear Deck Hanger. Rotate Rear Deck Hanger completely "over-center" so it is out of the way when raising and lowering the deck. Repeat for the opposite side of the deck.

D. Position the front caster wheels so they are away from the deck (such as the tractor would be traveling in reverse).

E. Lift the front of the deck until the deck is standing vertically (lifting can be made easier if someone pushes down on the rear end of the tractor). **IMPORTANT NOTE: PRIOR TO LETTING GO OF THE DECK MAKE SURE THAT THE DECK IS LIFTED FAR ENOUGH TO STAND COMPLETELY UPRIGHT BY ITSELF.** This will prevent the deck from falling down when servicing the underside of the mower deck

2. LOWERING THE DECK:

A. While firmly holding the Deck Lift Handle push the bottom (back) of the deck towards the rear of the tractor. Lower the deck until it rests on the ground.

B. Using the Deck Drag Bar as a handle, lift the rear corner of the deck and connect the Rear Deck Hanger. Repeat for the opposite side of the deck.

C. Install the engine to deck belt onto the clutch on the engine.

D. Ensure that the engine to deck drive belt is installed onto all of the pulleys and idlers in the drive train. Carefully rotate the Deck Belt Tension Latch to re-tension the Deck Belt.

E. Raise the Height Adjustment Latch Handle up and out of the slot in the top of the latch Plate. Push the Height Adjustment Foot Pedal forward until Height Adjustment Latch Handle engages the Latch Plate. Move the Height Adjustment Pin to the desired cutting height hole. Push and hold the Height Adjustment Foot Pedal forward while raising the Height Adjustment Latch Handle to disengage from the Latch Plate. Slowly lower the Height Adjustment Foot Pedal until the Height Adjustment Pin contacts the Latch Plate.

MOWER SHOWN IN OPERATING POSITION

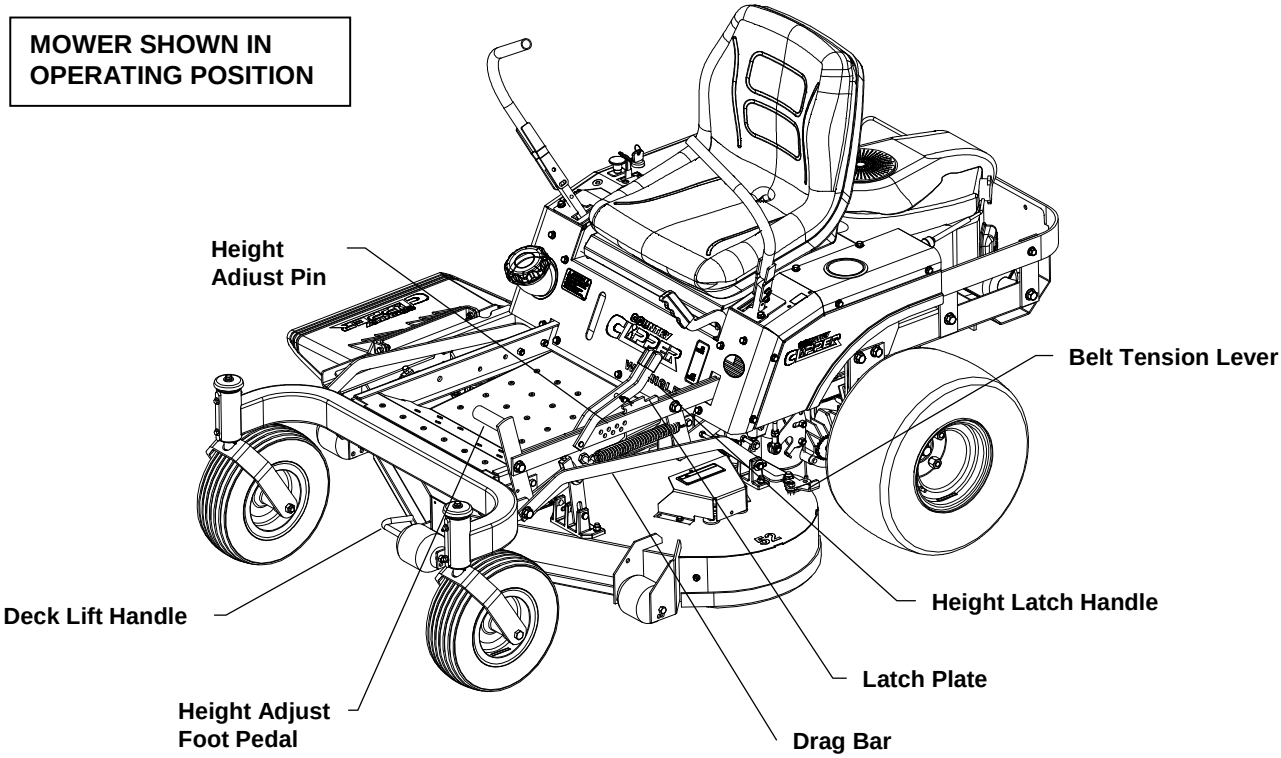

MOWER SHOWN IN SERVICING POSITION

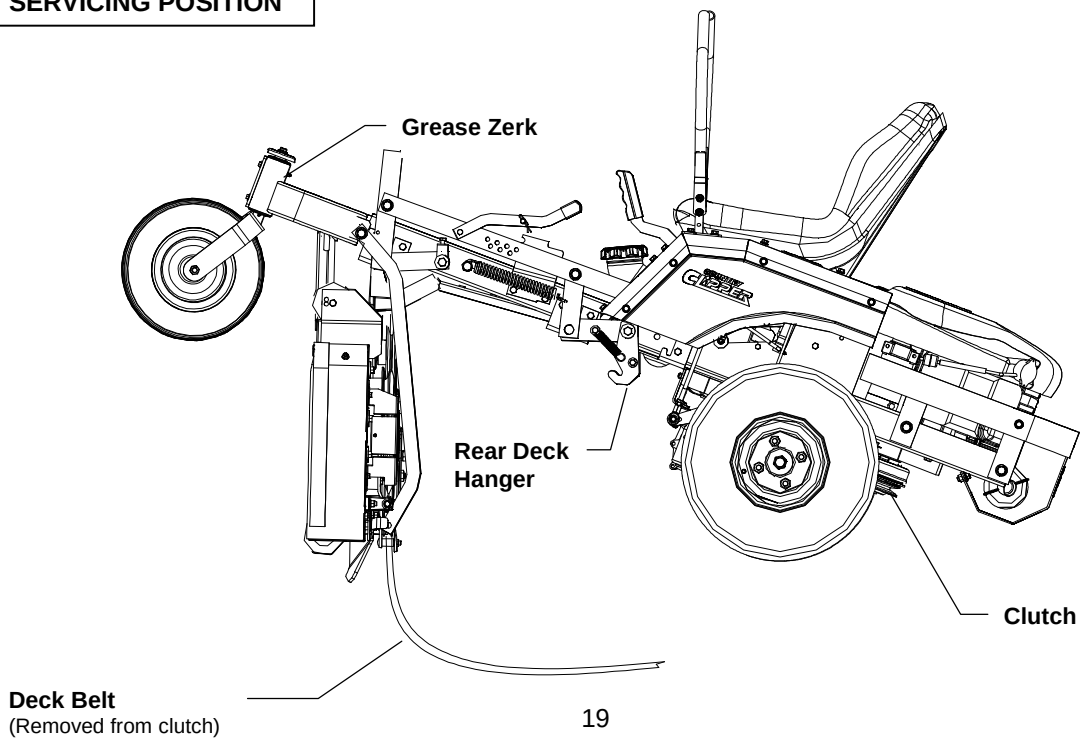

LEVELING THE DECK

NOTE: DECK HAS BEEN LEVELED AT THE FACTORY. IF LEVELING IS REQUIRED USE THE FOLLOWING PROCEDURES

1. Move the tractor to a hard surface (i.e. concrete or blacktop).

2. Set the tire pressure on each of the four tires to 12 psi

3. Set the deck cutting height to the highest position and rotate all blades by hand until one end of each blade points forward (toward the front of tractor). Take care when rotating blades, the end of the blade can be sharp.

4. Measure from the ground to the front blade tip of each blade. These measurements should be Within 1/8" of each other. (NOTE: To simplify this measuring, an optional Blade Measuring tool, part Number 629-374A is available from your local "Country Clipper" Dealer)

5. If adjustment is necessary slightly loosen the locknuts that secure the Deck Hanger mounting bolt. Turn Deck Height Adjustment Bolt to desired setting. Re-tighten locknuts that secure Deck Hanger mounting bolt. NOTE: When tightening locknuts ensure that the Deck Hanger still pivots freely (i.e. clamp forces should be against Deck Height Adjuster not the Deck Hanger).

6. Once the side-to-side cut height is within tolerance, measure from the ground to the blade tip at the rear of each blade. This measurement should be between 1/8" to 1/4" higher from the ground than the front of the blade tip from the ground on the corresponding side of the deck. Adjust the Rear Deck Hangers and/or Front Deck Hangers accordingly to obtain the proper measurements.

7. Double check all measurements and ensure that all locknuts are securely fastened without binding on the front or rear Deck hangers.

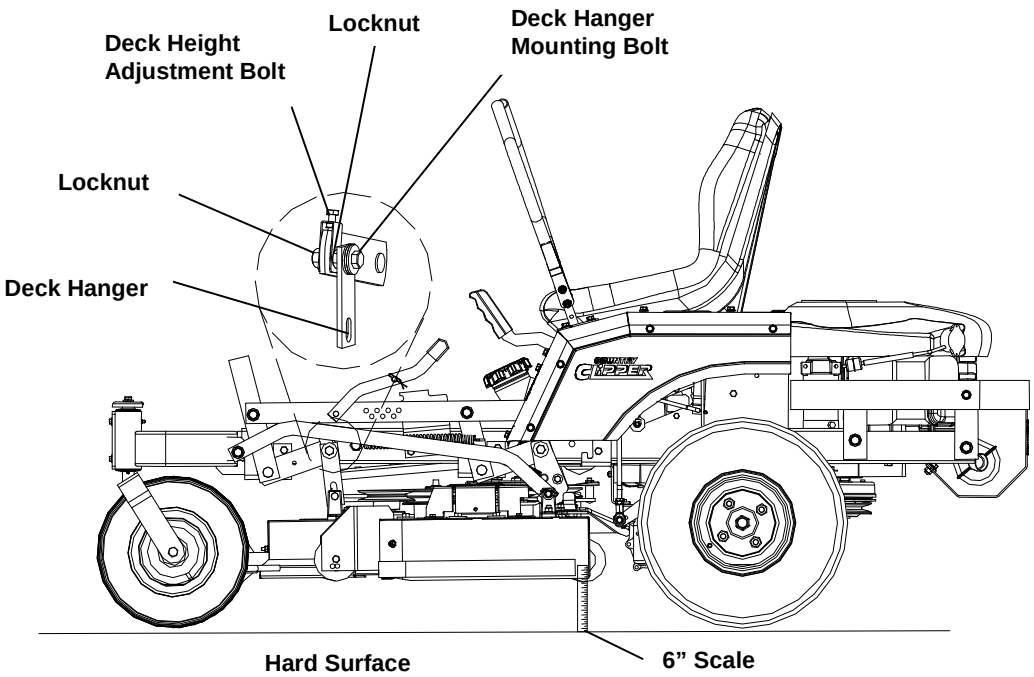

TROUBLE SHOOTING CHECK LIST

1. ENGINE WON'T TURN OVER:

Mower blades engaged ---------- disengage blades
Drive not in neutral ---------- move Control Lever(s) to neutral position
Blown fuse ---------- replace fuse
Dead battery ---------- charge or replace
Solenoid ---------- consult dealer
Ignition switch ---------- consult dealer
Starter ---------- consult dealer

2. ENGINE WILL TURN OVER BUT WON'T START:

No gas ---------- refuel
clean or replace fuel filters
Over or under choked ---------- adjust choke
Spark plug not firing ---------- check spark plug
condition and reset gap*
Carburetor maladjustment ---------- reset carburetor adjustment*
Ignition switch ---------- consult dealer

3. HARD TO START ENGINE:

Fuel line clogged ---------- clean fuel line and check fuel filter
Faulty fuel pump ---------- consult dealer
Spark plug wire loose or grounded ---------- check spark plug wires
Spark plug(s) faulty or improperly gapped ---------- check spark plug
condition and reset gap*
Electronic ignition defective ---------- consult dealer
Dirty or maladjusted carburetor ---------- readjust carburetor*
consult dealer for carburetor service

4. ENGINE STARTS BUT CUTS OUT:

Water in gasoline ---------- drain old gasoline and replace with new gasoline
clean carburetor bowl
Clogged fuel line ---------- check fuel filter
clean fuel line
Vent in fuel cap plugged ---------- check vent
Faulty fuel pump ---------- consult dealer
Maladjusted carburetor ---------- readjust carburetor*
Engine dies when Control Lever(s) is move from "neutral" ---------- parking brake set
release brake

5. ENGINE KNOCKS:

Low oil level ---------- check and add oil
Ignition timing off ---------- consult dealer
Fuel octane too low ---------- drain and replace with
higher octane gasoline
Over heated engine ---------- shut off engine and allow to cool

***** See engine manual for engine adjustments.

6. ENGINE SOMETIMES SKIPS AT HIGHER SPEEDS:

Incorrect Ignition Timing ---------- consult dealer

Carburetor maladjusted ---------- readjust carburetor
Faulty spark plugs ---------- check spark plug condition and reset gap*
Bouncing off seat safety switch ---------- slow down on rough terrain

7. ENGINE OVER HEATED:
Air intake screen or fins clogged ---------- clean intake screen and fins
Fuel mixture too lean ---------- readjust carburetor*
Oil level too low or too high ---------- adjust oil level
Improper ignition timing ---------- consult dealer
Running engine too slow ---------- run engine faster
(NOTE: Always mow at full throttle setting.)

8. ENGINE IDLES POORLY:
Carburetor maladjustment ---------- readjust carburetor
Improper spark plug gap ---------- check and re-gap plug*

9. ENGINE BACKFIRES:
Carburetor maladjustment ---------- readjust carburetor*

10. ENGINE RUNS BUT MOWER WON'T MOVE FORWARD:
Transmission locks in free wheel position ---------- put in lock position (see pg. 10)
Drive belt broken or slipping ---------- replace drive belt
Shift linkage disconnected ---------- reconnect
Transmission oil low ---------- consult dealer
Bad transmission ---------- consult dealer

11. TRANSMISSION LOSES POWER OR TRANSMISSIONS OVER HEATS:
Transmission damage ---------- consult dealer

12. MOWER TRANSMISSION DOES NOT ENGAGE RIGHT AND/OR LEFT HAND:
Transmission Free Wheel engaged---------- disengage Free Wheel
Loose or damage Control Linkage ---------- consult dealer
Low Transmission oil ---------- consult dealer

13. ENGINE STALLS WHEN BLADES ARE ENGAGED:
Operator not on seat ---------- sit on seat
Faulty interlock system ---------- consult dealer
Bad blade spindle bearing ---------- consult dealer
Deck drive belt not properly routed ---------- reroute
Blades blocked by foreign material ---------- clean under deck

14. DECK BLADES WILL NOT ENGAGE:
Blown fuse---------- replace fuse
Faulty wiring ---------- consult dealer
Faulty electric clutch ---------- consult dealer

***** See engine manual for engine adjustments.

BELT ROUTINGS

Hydrostatic Transmission Drive Belt
(Viewed from ground looking up)

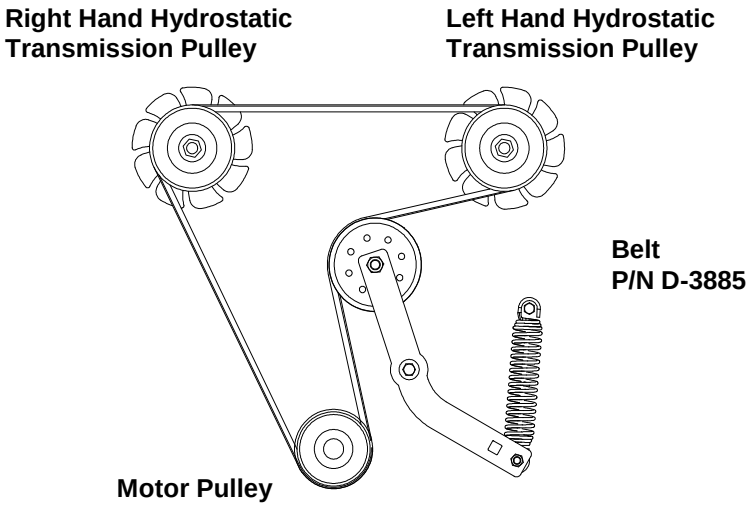

48” DECK BELT
P/N: D-3892

52” DECK BELT
P/N: D-3775-W

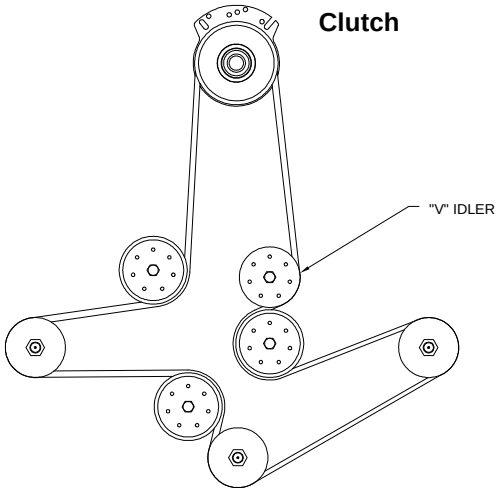

Clutch

41” DECK BELT
P/N: D-3796

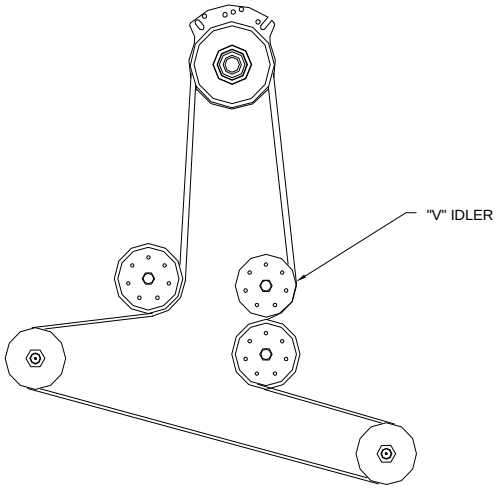

WIRING SCHEMATIC FOR KOHLER JOYSTICK (E-6405)

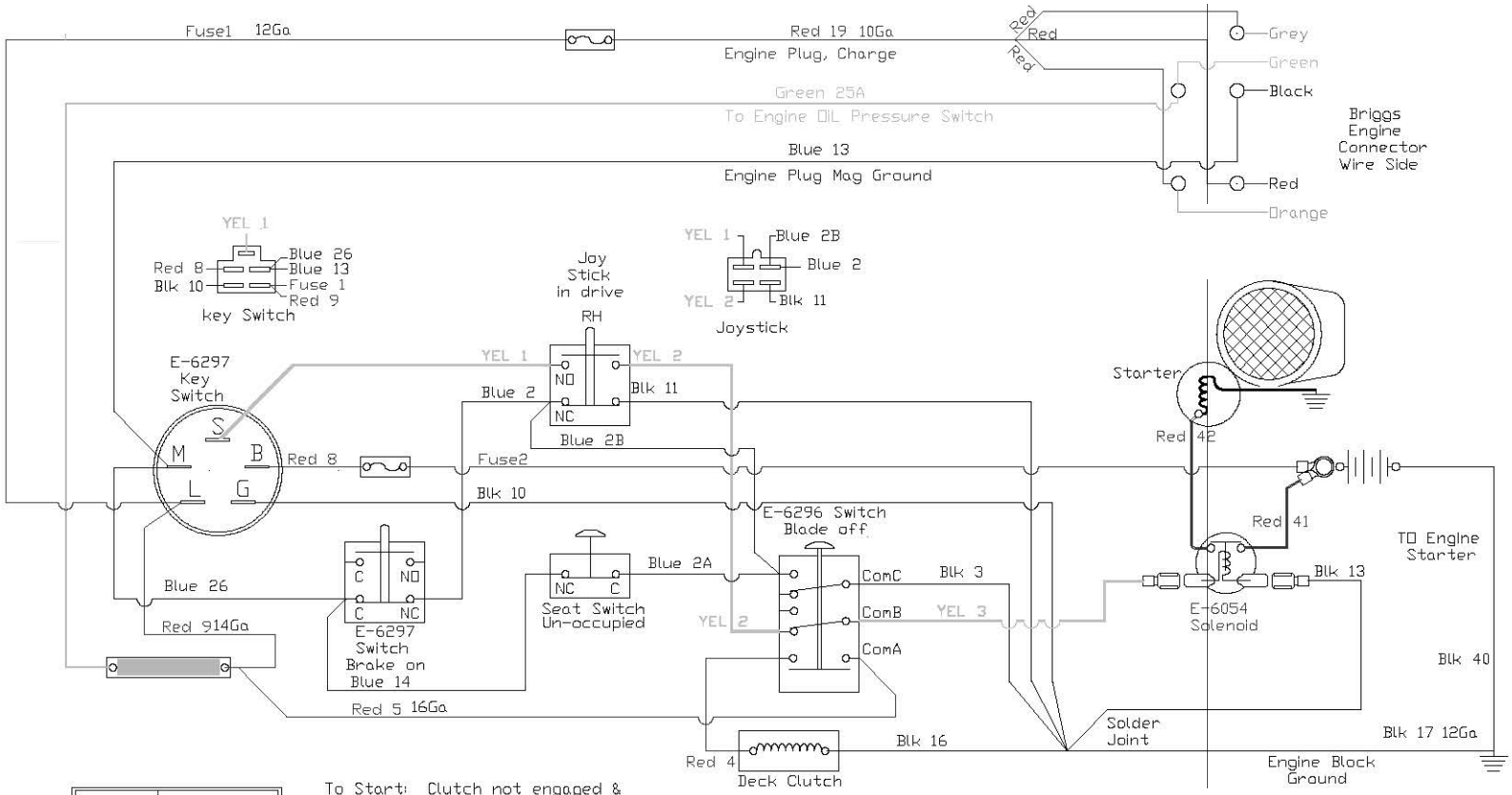

POSITION	CIRCUIT "MAKE"
1. OFF	G + M
2. RUN	B + L
3. START	B + L + S

To Start: Clutch not engaged & Steering Levers in Neutral

Engine Kill: If Steering levers in drive & brake is on or seat un-occupied
If Clutch is on and seat is not occupied

Start	Circuit	Yellow
Safety	Circuit	Blue
Power	Circuit	Red
Ground	Circuit	Black
Hr Mtr	Circuit	Green

WIRING SCHEMATIC FOR KAWASAKI JOYSTICK (E-6415) (PLUS E-6417 ADAPTER)

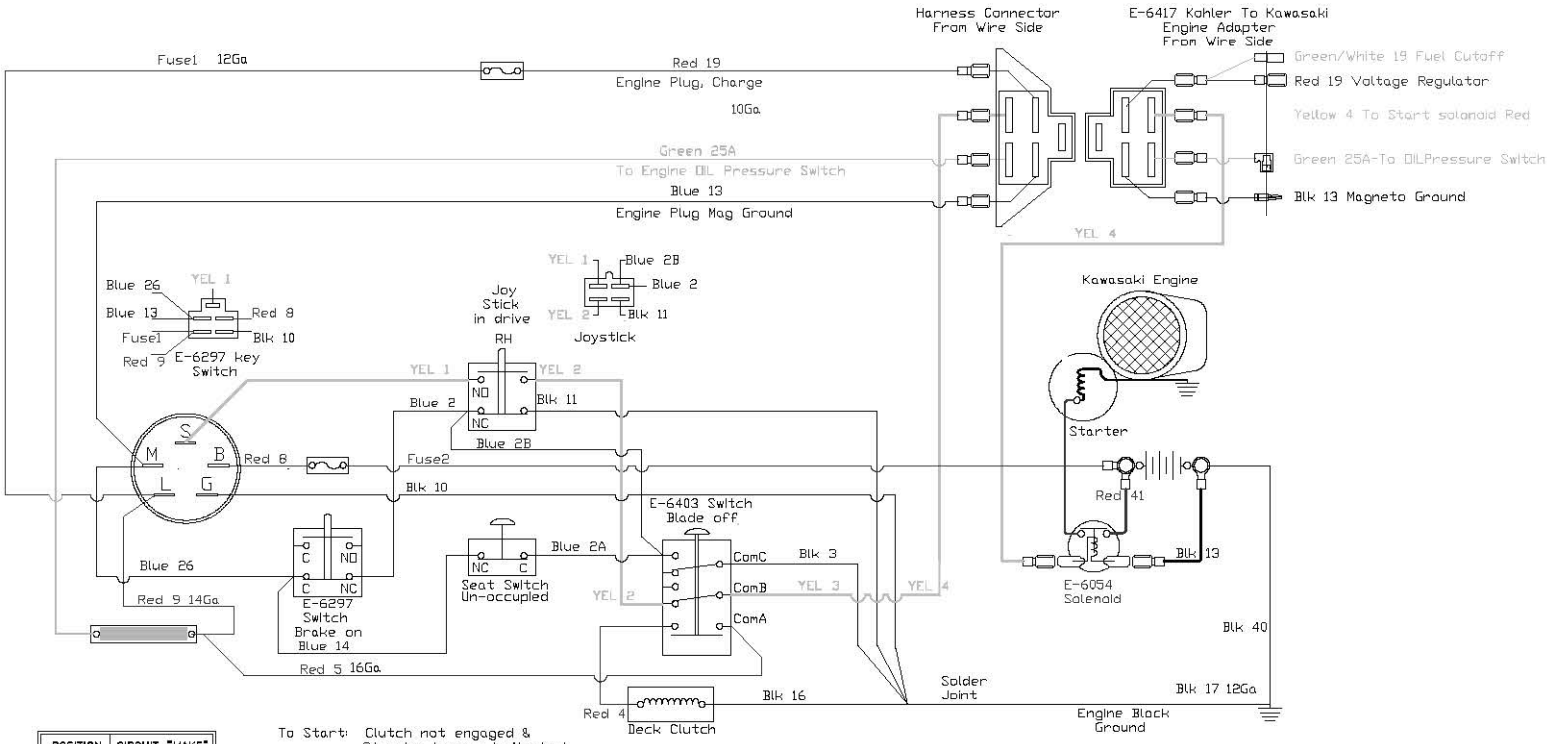

POSITION	CIRCUIT "MAKE"
1. OFF	G + M
2. RUN	B + L
3. START	B + L + S

To Start: Clutch not engaged & Steering Levers in Neutral

Engine Kill: If Steering levers in drive & brake is on or seat un-occupied

If Clutch is on and seat is not occupied

Start	Circuit	Yellow
Safety	Circuit	Blue
Power	Circuit	Red
Ground	Circuit	Black
Hr Mtr	Circuit	Green

WIRING SCHEMATIC FOR KAWASAKI TWINSTICK (E-6416) PLUS (E-6417) ADAPTER

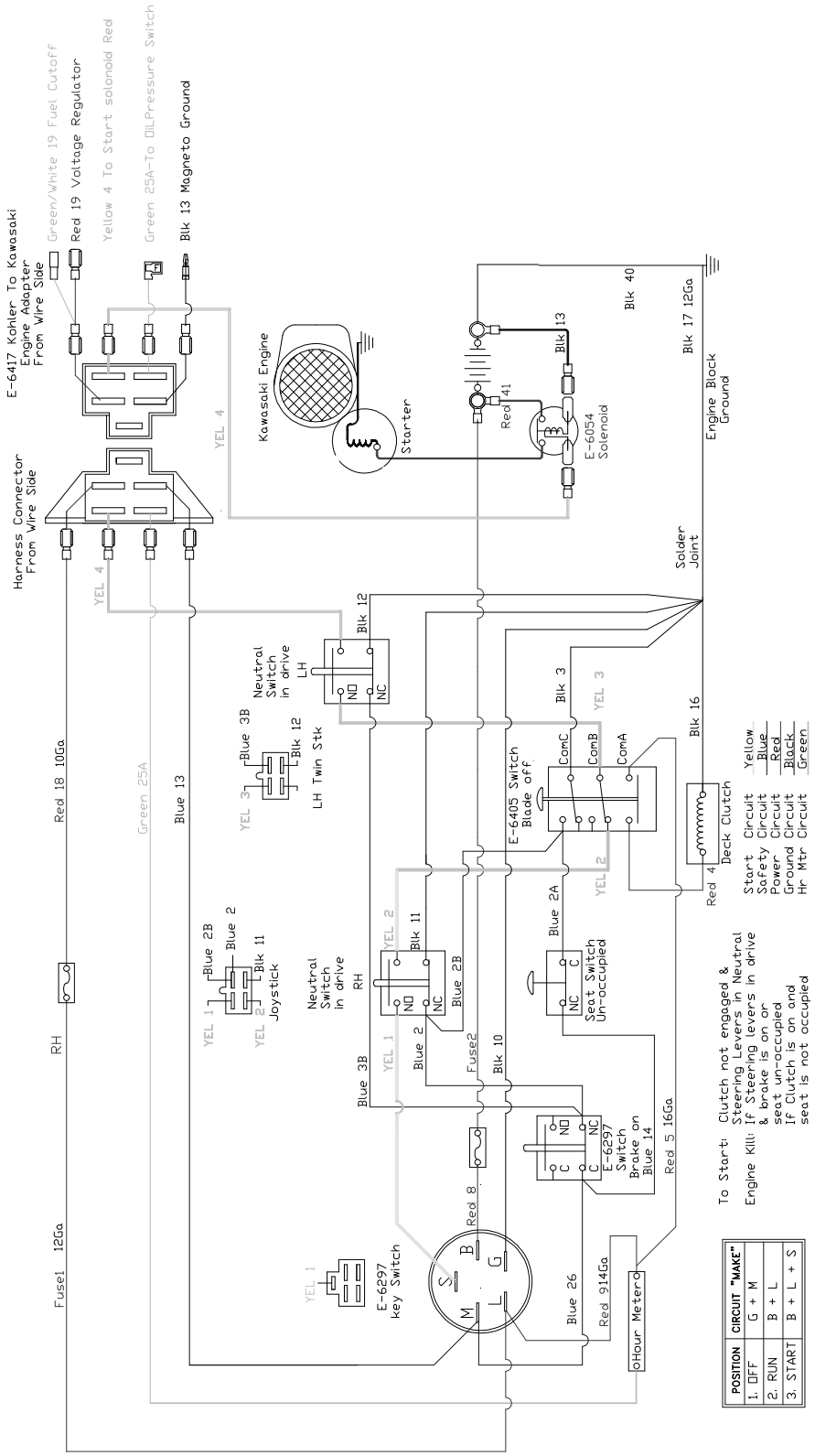

WIRING SCHEMATIC FOR KOHLER TWINSTICK (E-6416) PLUS (E-6436) ADAPTER

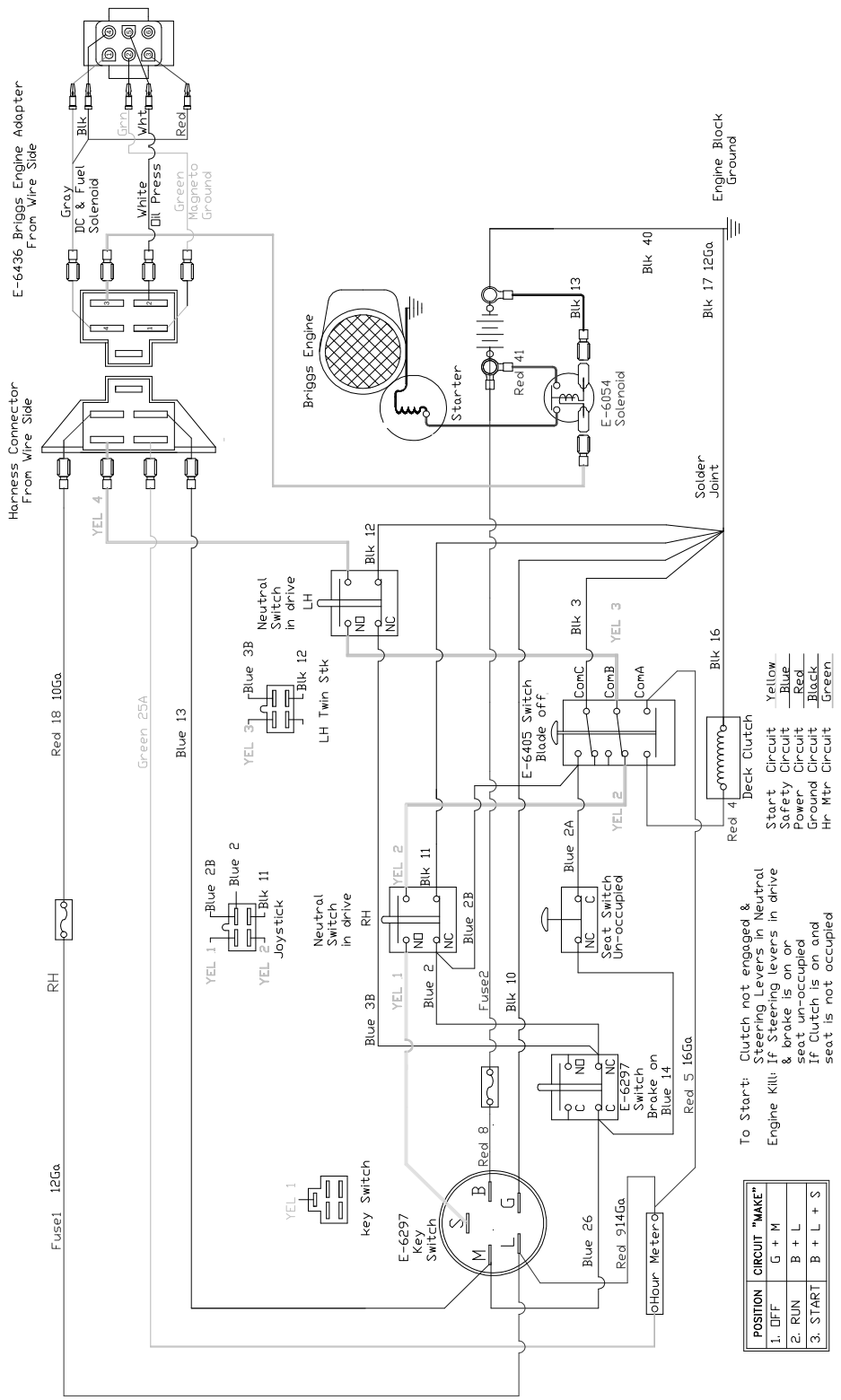

NOTES / SERVICE RECORDS:

DATE	SERVICE WORK COMPLETED

NOTES / SERVICE RECORDS:

DATE	SERVICE WORK COMPLETED

Safety Instructions & Operators Manual

COUNTRY CLIPPER®

Zero Turn Radius Mower

WRANGLER

135

Country Clipper Division
Shivvers Manufacturing Inc.
613 W. English St.
Corydon, IA 50060-0467
Ph. 641-872-2544
Fax. 641-872-1593

P-13108